SSRG International Journal of Electrical and Electronics Engineering
ISSN: 2348 – 8379 /doi:10.14445/23488379/IJEEE-V7I11P106

Volume 7 Issue 11, 36-44, November 2020

Research and Design Controller for Robot 5 degrees of freedom Applied in Education

Nguyen Duc Dien[#], Tran Ngoc Son[#], Roan Van Hoa[#], Nguyen Van Toan[#], Pham Van Huy[#]

[#]*University of Economics - Technology for Industries, Viet Nam*

Abstract

The world today is in industrial revolution 4.0; it allows humanity to change economies' face. Automation and robotics are an important trend in the industry's future. The products are industrial robots widely used in many different fields, such as factories, space. Also, there are many robot models for learning and research at reasonable prices. This paper presents a controller design method and construction algorithm for industrial robots to construct experiments for training. A new robot control interface is also designed with algorithms implemented based on the designed controller. The proven algorithm is to control a robot that plans the trajectory of the pick and drop process. Finally, the repeatability accuracy of the robot and the proposed algorithm will be verified experimentally.

Keywords — *Industrial robots, controllers, control algorithms, pick-up.*

I. INTRODUCTION

Automating production lines in factories and factories is an indispensable need today. In which industrial robots or robots play an important role in the automation industry. Therefore, familiarization with industrial robots during college is very necessary for college students. This knowledge will be very useful to robot control engineers in the future. However, today's cost of industrial robots is quite high compared to the ability to buy in schools. In this paper, the study will focus on approaching the problem in the direction of self-designing the robot's controller and building the console on the computer or smartphone. Another advantage of the controller design scheme is to enhance the ability to receive and process data from the external environment. For industrial robots today, the robot driver's ability to interfere deeply is not supported by the manufacturers. Commands supported in programming languages are often limited, especially when receiving signals from external sensors for processing. There have been several studies investigating the design of new controllers for industrial robots. P. Kazanzides et al. developed the SIERA system that allows direct control of the robot's joints from servo drives [1]. In the study of Mohammed Abu Qassem et al. [2], Matlab/Simulink was used as a tool to test the motion properties of the AL5B Robot arm. Robotic arm simulation by using Matlab and Robotics Toolbox for industry application [3]. Design a new controller based on a TUNIS computer to replace the robot PUMA controller [4]. Besides, there are some researches on robot control software [5] - [8]. Building a new controller capable of connecting to the old controller of the industrial robot STAUBLi RX60 is proposed in [9]. However, research on constructing practice exercises for university students is very limited. The paper's objective is to design a controller and build a control algorithm for an industrial robot to help students master the technology and improve their robotics practice.

II. MECHANICAL SECTION ROBOT 5 DEGREES OF FREEDOM

A. *Configuration Robot*

Mechanical head 5 degrees of freedom robot has a spherical structure with 5 rotating joints, in which the wrist flexion is mechanically driven through a parallel structure. Swivel joints with bearings and stroke sensors to limit the angle of rotation. The 5-degrees of freedom robot spindles are driven by DC Servo motors fitted with planetary gear reducers, incorporating a screw reducer (K2, K3 joint) and gear reducer tapered clutch (K4 joint). Optical encoder mounted directly on the motor spindle. The actual picture of 5 degrees of freedom robot is shown in Figure 1.

Figure 1: Image of robot 5 degrees of freedom

The dimensions and mechanical structure of the 5 degrees of freedom robot are illustrated in Figure 2.

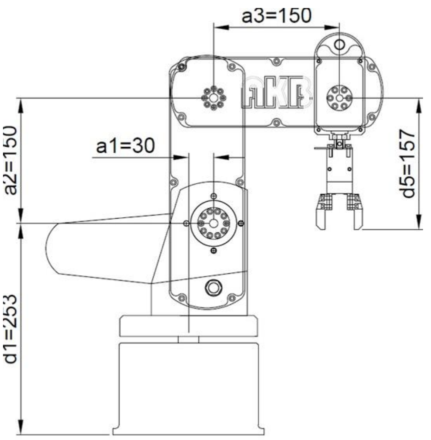

Figure 2: Dimensions and structure of the robot 5 degrees of freedom

B. Construct the Forward Kinetics

The forward kinematic problem is built to calculate the endpoints' coordinates based on the joints' feedback angle.

a) Set Origin of Coordinates for Joints

According to the convention of Denavit and Hartenberg, the Descartes coordinate system is attached to each stage of the actuator - from the sole ({0}) to the last ({5}). Except for the base and impact start, the i coordinate system is attached to the i stage according to the following principles:

- The z_i-axis is aligned with the joint axis (i + 1). The positive direction of rotation or translating can be arbitrarily chosen.
- The x_i axis is determined according to the common normal between the coupling axes i and (i + 1) and the direction from the matching axis i to the matching axis (i + 1). If the two axes are parallel, the x_i axis can be selected perpendicularly at any position along those two coupling axes. If the two coupling axes intersect, the x_i axis can be selected in the vector direction via the product $z_{i-1} \times z_i$ or in the opposite direction. The origin is the intersection point.
- The y_i axis is determined according to the right-hand rule.
- The zero coordinate systems are mounted on the base at a convenient location, with the z_0 axis aligned with the first matching axis. Another coordinate system attached to the actuator stage called the end coordinate system, or the actuator coordinate system, is used to determine this head's position. The end coordinate system can be positioned at any point of the impact head, but the x_n axis must be perpendicular to the terminal axis. For convenience, the z_n-axis is usually determined according to the approach of the actuator.

Let H_{i-1} be the intersection point of the axis x_i and z_{i-1}, O_i be the origin of the coordinate system i, the intersection point between the axis x_i and z_i. Regardless of the material structure of the stitches, the following parameters are uniquely defined according to the geometry of the shafts:

- a_i: the deviation between two adjacent coupling axes, $a_i = |H_{i-1}O_i|$
- d_i: the translational distance between the two normal of the matching axis, $d_i = O_{i-1}H_{i-1}$ is positive if the vector $O_{i-1}H_{i-1}$ in the positive direction of z_{i-1}, is negative if it is in the opposite direction.
- α_i: twist angle between two consecutive coupling axes, which is the angle needed to rotate the z_{i-1} axis in line with the z-axis around the positive x_i-axis according to the right hand-rule.
- θ_i: the angle of fitting between the two incidents normal of the joint axis, which is the angle needed to rotate the x_{i-1} axis in line with the x_i-axis around the positive z_{i-1} axis right-hand rule.

When there are stepwise coordinates of the actuator, it is possible to set up a transformation matrix 4×4 relating to two consecutive coordinates. It can be seen that the i coordinate system can be converted from the i-1 coordinate system by successive rotations and translations. Start position of Sethome of 5 degrees of freedom Robot (Figure 3) and set the origin of coordinates for joints, as shown in Figure 4.

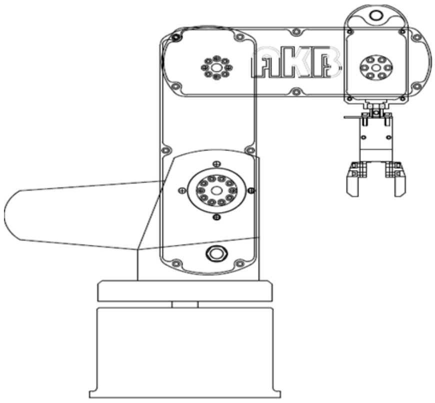

Figure 3: Robot Sethome position

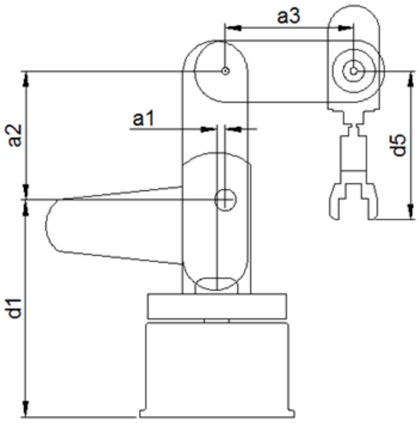

Figure 4: The coordinate system is attached to the joints of the 5 degrees of freedom robot

b) Parameter Table D-H (Denavit-Hartenberg)

According to the kinetic theory for the Robot 5 degrees of freedom, we have:

Table 1: D-H Parameter Table for 5 degrees of freedom Robot

Joint i	α_i	a_i (mm)	d_i (mm)	θ_i	Operation range
1	90	30	253	θ_1	$-155^0 \div +155^0$
2	0	150	0	θ_2+90	$-35^0 \div +130^0$
3	0	150	0	θ_3-90	$-130^0 \div +130^0$
4	90	0	0	$90+\theta_4$	$-130^0 \div +130^0$
5	0	0	157	θ_5	$-130^0 \div +130^0$

c) Establish the Conversion Matrix According to D-H

To calculate the endpoint coordinates of 5 degrees of freedom robot according to the rotation angle of the joints, it is necessary to build the product of conversion matrices from joint 5 to joint 1. Conversion matrices (the Denavit-Hartenberg transformation matrix) for joint i About the i-1 joint is written as follows:

Joint 5:

$$ {}^4_5T = \begin{bmatrix} \cos\theta_5 & -\sin\theta_5 & 0 & 0 \\ \sin\theta_5 & \cos\theta_5 & 0 & 0 \\ 0 & 0 & 1 & d_5 \\ 0 & 0 & 0 & 1 \end{bmatrix} \quad (1) $$

Joint 4:

$$ {}^3_4T = \begin{bmatrix} -\sin\theta_4 & 0 & \cos\theta_4 & 0 \\ \cos\theta_4 & 0 & \sin\theta_4 & 0 \\ 0 & 1 & 0 & 0 \\ 0 & 0 & 0 & 1 \end{bmatrix} \quad (2) $$

Joint 3:

$$ {}^2_3T = \begin{bmatrix} \cos\theta_3 & -\sin\theta_3 & 0 & a_3.\cos\theta_3 \\ \sin\theta_3 & \cos\theta_3 & 0 & a_3.\sin\theta_3 \\ 0 & 0 & 1 & 0 \\ 0 & 0 & 0 & 1 \end{bmatrix} \quad (3) $$

Joint 2:

$$ {}^1_2T = \begin{bmatrix} \cos\theta_2 & -\sin\theta_2 & 0 & a_2.\sin\theta_3 \\ \sin\theta_2 & \cos\theta_2 & 0 & a_2.\sin\theta_3 \\ 0 & 0 & 1 & 0 \\ 0 & 0 & 0 & 1 \end{bmatrix} \quad (4) $$

Joint 1:

$$ {}^0_1T = \begin{bmatrix} \cos\theta_1 & 0 & -\sin\theta_1 & a_1.\sin\theta_1 \\ \sin\theta_1 & 0 & \cos\theta_1 & a_1.\sin\theta_1 \\ 0 & -1 & 0 & d_1 \\ 0 & 0 & 0 & 1 \end{bmatrix} \quad (5) $$

The conversion matrix from joint 5 to the origin is calculated by multiplying the conversion matrices from the following and previous matches, according to the formula:

$$ {}^0_5T = {}^0_1T.{}^1_2T.{}^2_3T.{}^3_4T.{}^4_5T \quad (6) $$

Abbreviations:

$$ \cos\theta_i = C_i; \sin\theta_i = S_i; S_{ijk} = S_i + S_j + S_k; C_{ijk} = C_i + C_j + C_k \quad (7) $$

We have matrix multiplication results:

$$ T = {}^0_5T = \begin{bmatrix} -S_1S_5 - C_1C_5S_{234} & -S_1C_5 + C_1S_5S_{234} & C_1C_{234} & C_1(a_1 + a_2C_2 + a_3C_{23} + d_5C_{234}) \\ S_1C_5 - C_1S_5S_{234} & C_1C_5 + S_1S_5S_{234} & S_1C_{234} & S_1(a_1 + a_2S_2 + a_3C_{23} + d_5C_{234}) \\ -C_5C_{234} & S_5C_{234} & -S_{234} & (d_1 - a_2S_2 - a_3C_{23} - d_5S_{234}) \\ 0 & 0 & 0 & 1 \end{bmatrix} \quad (8) $$

The matrix T is the global transformation matrix of the 5 degrees of freedom robot kinetic model. From this matrix, the position and direction of the robot terminal can be drawn from the base.

d) Get Location in the Cartesian Space

X, Y, Z values found from the last column of the conversion matrix (T) are as follows:

$$ X = C_1\left(a_1 + a_2C_2 + a_3C_{23} + d_5C_{234}\right) \quad (9) $$

$$ Y = S_1\left(a_1 + a_2C_2 + a_3C_{23} - d_5C_{234}\right) \quad (10) $$

$$ Z = \left(d_1 + a_2S_2 + a_3S_{23} + d_5S_{234}\right) \quad (11) $$

The direction of last joint {5} and joint {1} need to coincide on the same axis, but in this model, there is no coincide, so we need to rotate joint {5} by an angle of -90^0 by axis y$_5$ such that the overall rotation matrix is multiplied by -90^0:

$$ R_v = \begin{bmatrix} \cos(-90^o) & 0 & \sin(-90^o) \\ 0 & 1 & 0 \\ -\sin(-90^o) & 0 & \cos(-90^o) \end{bmatrix} \quad (12) $$

$$ R_v = \begin{bmatrix} 0 & 0 & -1 \\ 0 & 1 & 0 \\ 1 & 0 & 0 \end{bmatrix} \quad (13) $$

The rotation matrix would be:

$$ R = \begin{bmatrix} 0 & 0 & -1 \\ 0 & 1 & 0 \\ 1 & 0 & 0 \end{bmatrix} .X. \begin{bmatrix} -S_1S_5 - C_1C_5S_{234} & -S_1C_5 + C_1S_5S_{234} & C_1C_{234} \\ S_1C_5 - C_1S_5S_{234} & C_1C_5 + S_1S_5S_{234} & S_5C_{234} \\ -C_5C_{234} & S_5C_{234} & -S_{234} \end{bmatrix} \quad (14) $$

The rotation of a 3-dimensional object around the orthogonal axes is represented by the Yaw, Pitch, and Roll rotations. Pitch is the counter-clockwise rotation of angle β around the y_5-axis of the robot terminal (Figure 5).

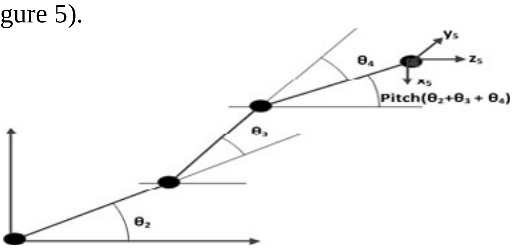

Figure 5: Performing the pitch angle of the robot 5 degrees of freedom

$$pitch\beta \ = \ \theta_2 + \ \theta_3 + \theta_4 = \ \theta_{234} \qquad (15)$$

$$\theta_{234} = a\tan 2(r_{13} \pm \sqrt{r_{23}{}^2 + r_{33}{}^2}) \qquad (16)$$

Here we use atan2 since its interval is [−π, π], while the range of atan is [−π/2, π/2]. Roll: is the counter-clockwise rotation of angle γ around the x_5 axis, rolly = θ_5 is received from:

$$\theta_5 = a\tan 2(\frac{r_{12}}{C_{234}}, \frac{r_{11}}{C_{234}}) \qquad (17)$$

yaw is the counter-clockwise rotation of α around the z_5 axis; yaw is not free but is limited by θ_1. The above expressions for the robot's forward kinetics will be used to calculate the robot's X, Y, Z coordinates according to the given angles (Joint 1:5), using for control programming and robot simulation.

C. The Origin Position in the Model

In the Home position, all the angles are 0. So when we set $\theta_1 = 0$, $\theta_2 = 0$, $\theta_3 = 0$, $\theta_4 = 0$, $\theta_5 = 0$ into the matrix (T), we have the conversion matrix drawn compact as follows:

$$R = \begin{bmatrix} 0 & 0 & 1 & a_1 + a_2 + a_3 + d_5 \\ 0 & 1 & 0 & 0 \\ 1 & 0 & 0 & d_1 \\ 0 & 0 & 0 & 1 \end{bmatrix}$$

$$= \begin{bmatrix} 0 & 0 & 0 & 180 \\ 0 & 1 & 0 & 0 \\ -1 & 0 & 0 & 259 \\ 0 & 0 & 0 & 1 \end{bmatrix} \qquad (18)$$

The Home position changeover matrix provides the direction and position of the robot's end. From the 3×3 matrices, the direction is described as follows: joint {5} rotates with joint {0} so that the z_5-axis is parallel and in the same direction as the z_0-axis of the sole; y is parallel and in the same direction as the y_0 axis of the sole, and x_5 is parallel to the comparison in the opposite direction.

Home position is given by 3×1 displacement matrix $\begin{bmatrix} a_1 + \ a_2 + \ a_3 + d_5 & 0 & d_1 \end{bmatrix}$

Here we use atan2 since its interval is [−π, π], while the range of atan is [−π/2, π/2]. Roll is the counter-clockwise rotation angle of angle γ around the x_5 axis. rolly = θ_5 received from:

$$\theta_5 = a\tan 2(\frac{r_{12}}{C_{234}}, \frac{r_{11}}{C_{234}}) \qquad (19)$$

yaw is the counter-clockwise rotation of α around the z_5 axis. For robot yaw not free but limited by θ_1.

D. Build Reverse Kinetics

The inverse kinematics problem is built to calculate the joints' rotation angle when knowing the endpoint coordinates and the direction of movement of the robot. For 5 degrees of freedom robot, we have 5 parameters in the Cartesian coordinate: x, y, z, roll (β), pitch (γ). To determine the joints' rotation angle, we must construct a conversion matrix from 5 parameters in the Cartesian coordinate. Because the rotational matrix created depends only on the roll, pitch, and yaw of the robot arm. For robots without yaw, however, there is the rotation of joint 1. Hence the computation for yaw is as follows:

$$\alpha \ = \ \theta_1 = \ a \ tan2(x, y) \qquad (20)$$

First, we rotate the joint {5} by an angle -β around its x-axis, then rotate the joint at a new position {5'} an angle γ around its principle y' axis, then finally rotate the joint at new {5''} an angle α around its principle z' axis.

$$Ma\ tran\ quay = Rx(-b)\ * Ry(g)\ * Rz(a) =$$

$$= \begin{bmatrix} 1 & 0 & 0 \\ 0 & C_\beta & S_\beta \\ 0 & -S_\beta & C_\beta \end{bmatrix} X \begin{bmatrix} C_\gamma & 0 & S_\gamma \\ 0 & 1 & 0 \\ -S_\gamma & 0 & C_\gamma \end{bmatrix} X \begin{bmatrix} C_\alpha & -S_\alpha & 0 \\ S_\alpha & 1 & 0 \\ 0 & 0 & C_\gamma \end{bmatrix}$$

$$= \begin{bmatrix} C_\alpha C_\gamma & -S_\alpha C_\gamma & S_\gamma \\ S_\alpha C_\beta - C_\alpha S_\gamma S_\beta & C_\alpha C_\beta + S_\alpha S_\gamma S_\beta & C_\gamma S_\beta \\ -C_\alpha C_\beta - C_\alpha S_\gamma C_\beta & C_\alpha S_\beta + S_\alpha C_\beta S_\gamma & C_\beta C_\gamma \end{bmatrix} \qquad (21)$$

Now we rotate the matrix 90^0 around the y axis:

$$R_y(-90^o) = \begin{bmatrix} \cos(-90^o) & 0 & \sin(-90^o) \\ 0 & 1 & 0 \\ -\sin(-90^o) & 0 & \cos(-90^o) \end{bmatrix} \qquad (22)$$

$$R_y(-90^o) = \begin{bmatrix} 0 & 0 & -1 \\ 0 & 1 & 0 \\ 1 & 0 & 0 \end{bmatrix}$$

We have the following rotation matrix:

$$T = \begin{bmatrix} -S_\alpha S_\beta - C_\alpha S_\gamma C_\beta & -C_\alpha S_\beta + S_\alpha S_\gamma C_\beta & C_\gamma C_\beta \\ S_\alpha C_\beta - C_\alpha S_\gamma S_\beta & C_\alpha C_\beta + S_\alpha S_\gamma S_\beta & C_\gamma S_\beta \\ -C_\alpha C_\gamma & S_\alpha C_\gamma & -S_\gamma \end{bmatrix} \qquad (23)$$

Therefore, the overall conversion matrix would be:

$$T = \begin{bmatrix} -S_\alpha S_\beta - C_\alpha S_\gamma C_\beta & -C_\alpha S_\beta + S_\alpha S_\gamma C_\beta & C_\gamma C_\beta & X \\ S_\alpha C_\beta - C_\alpha S_\gamma S_\beta & C_\alpha C_\beta + S_\alpha S_\gamma S_\beta & C_\gamma S_\beta & Y \\ -C_\alpha C_\gamma & S_\alpha C_\gamma & -S_\gamma & Z \\ 0 & 0 & 0 & 1 \end{bmatrix} \qquad (24)$$

Comparing the conversion matrix in the T equation in the forward kinematics with the equation in the matrix T above, we deduce: $\theta_1 = \alpha$, $\theta_{234} = \beta$, $\theta_5 = \gamma$

Now we have θ_1 and θ_5 separately, but θ_2, θ_3, and θ_4 are included in θ_{234}, so we need to separate them. To separate these parameters, we use the geometric method, as shown in Figure 6. To find θ_2, θ_3, and θ_4, we have the coordinates X, Y, Z in the Cartesian coordinate:

$$X_1 = \sqrt{(X^2 + Y^2)} and Y_1 = Z \tag{25}$$

We have the pitch rotation of the last stage $\theta_{234} = \beta$, from there we can find the point X_2, Y_2 calculated by the following formula:

$$X_2 = X_1 - d_5 cos\theta_{234} \tag{26}$$

$$Y_2 = Y_1 + d_5 sin\theta_{234} \tag{27}$$

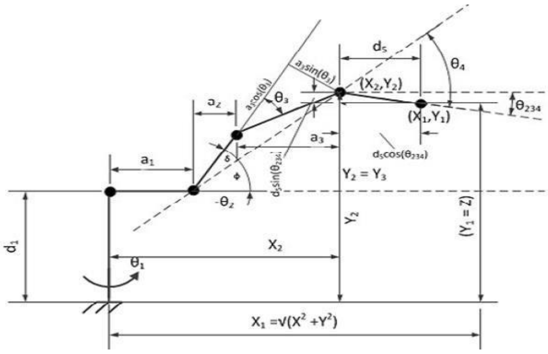

Figure 6: Geometrical method for reverse kinetics

Now the distances X_3 and Y_3 can be found from:

$$\begin{gathered} X_3 = X_2 - a_1 \\ Y_2 = Y_1 + d_5 sin\theta_{234} \\ Y_2 = Y_2 \end{gathered} \tag{28}$$

Applying the cos values to the triangle ABC, we have:

$$\cos\theta_3 = \frac{X_3^2 + Y_3^2 - a_2^2 - a_3^2}{2a_2a_3} \tag{29}$$

$$\theta_3 = a\tan 2(\pm\sqrt{1-\cos^2\theta_3}, \cos\theta_3 \tag{30}$$

From Figure 5, we have:

$$\begin{gathered} \theta_2 = -\Phi - \sigma , hay \\ \theta_2 = -atan2\left(Y_3, X_3\right) - atan2\left(a_3 sin\theta_3, a_2 + cos\theta_3\right) \end{gathered} \tag{31}$$

Finally, we have: $\theta_4 = \theta_{234} - \theta_2 - \theta_3$

The above expressions for the reverse kinetics of the 5 degrees of freedom robot will calculate the rotation angles of the robot's endpoint coordinates and rotation direction for use in robot control and simulation.

III. CONSTRUCTION CONTROLLER FOR ROBOT 5 DEGREES OF FREEDOM

A. *Signal Pin Diagram of 5 degrees of freedom Robot*

The 5 degrees freedom robot's signal pin diagram includes 01 male 25-pin jack and 01 female 25-pin jack. These 2 jacks are signals of encoders, sensors, and motors (Figure 7).

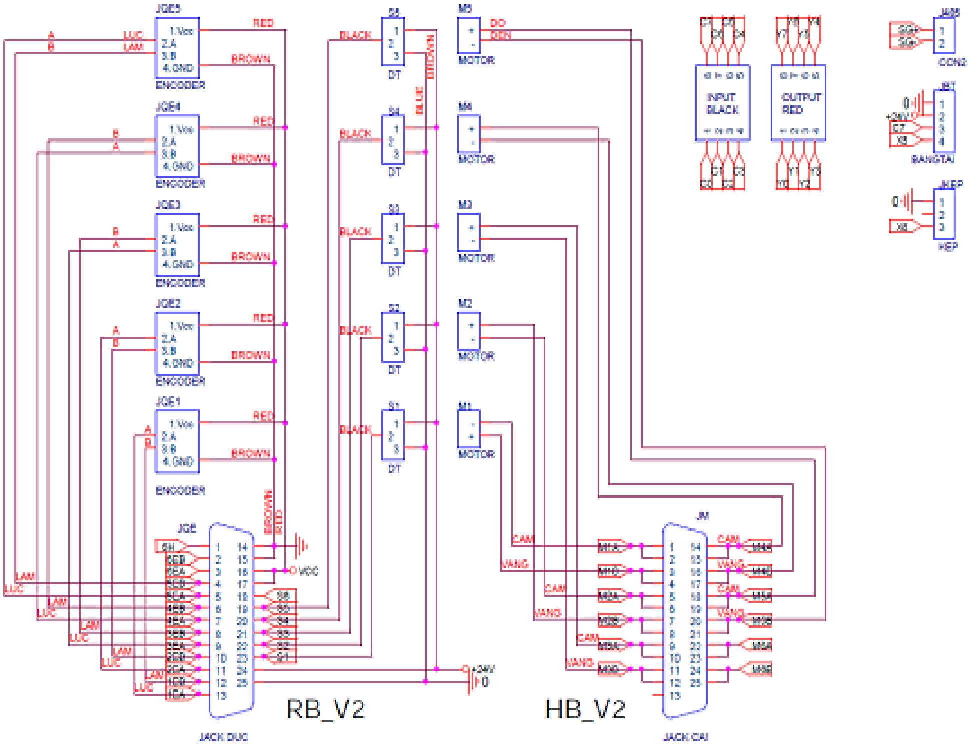

Figure 7: Signal pin diagram of 5 degrees of freedom robot

B. Control Circuit Construction

a) Control Circuit Structure Diagram

The control structure diagram for the 5 degrees of freedom robot is illustrated in Figure 8.

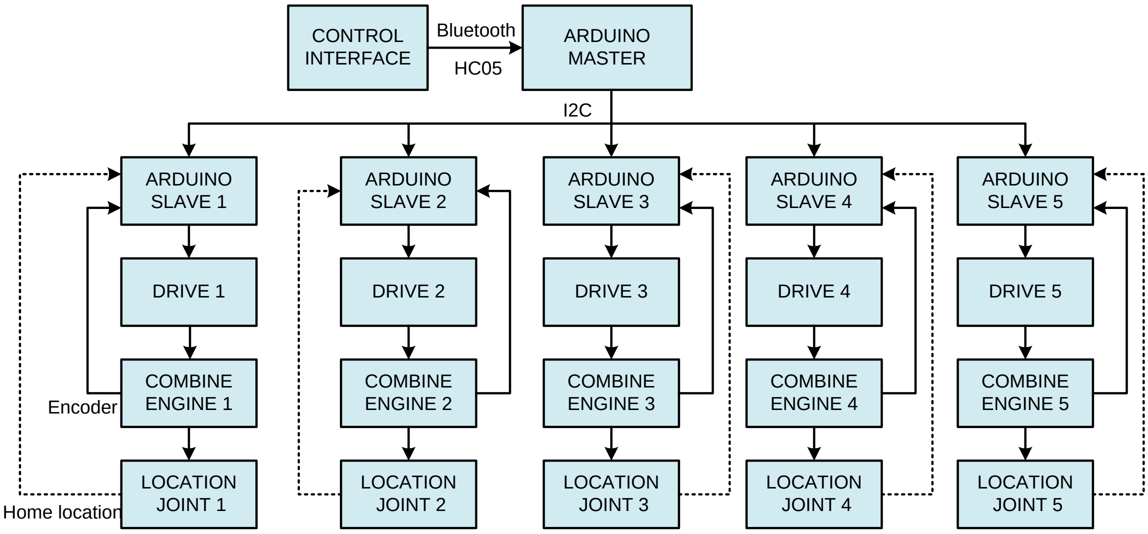

Figure 8: Control structure for the robot 5 degrees of freedom

In which Drive controls the motor using 2 H-bridge circuits, one Drive can control 2 motors, the drive image is illustrated in Figure 9.

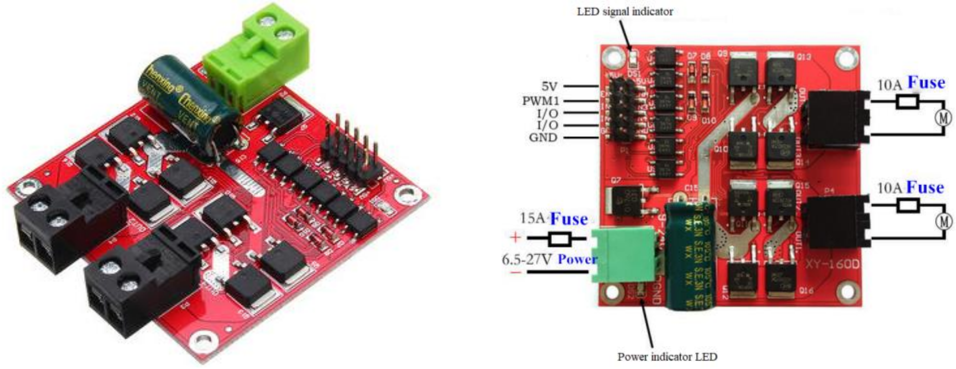

Figure 9: Drive motor controls the joints

The specifications of the Drive are as follows:

- Motor voltage input: 6.5V-27V.
- PWM frequency range: 0-10KHZ.
- Working temperature: -25^0 to 80^0.
- Product size: 55*55*16mm (length and width).
- Rated output current 7A, maximum current 50A.
- Allows input signal (ENA) PWM input speed adjustable, minimum pulse width PWM 10µs.
- The voltage of control signal 3-6.5V respectively is allowed signal and control signal to reverse the motor.

b) Control Circuit Construction

The control circuit is completely built, as shown in Figure 10.

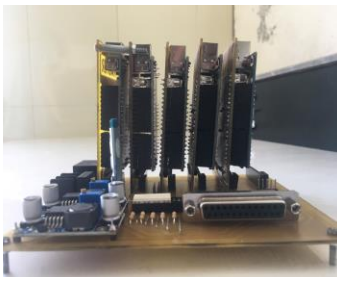

Figure 10: Control circuit images for the 5 degrees of freedom robot

Arduino Master signal connection diagram (Figure 11):

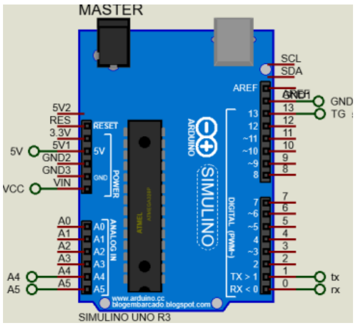

Figure 11: Arduino Master signal connection diagram

Diagram of connecting Arduino Master with solenoid valve 3/2 with grip control as shown in Figure 13.

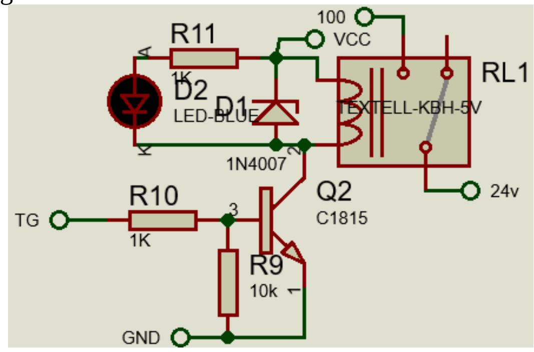

Figure 13: Arduino Master connection diagram with solenoid valve 3/2 with grip control

Figure 14 illustrates the I2C communication connection diagram between Arduino Master and Arduino SLAVE.

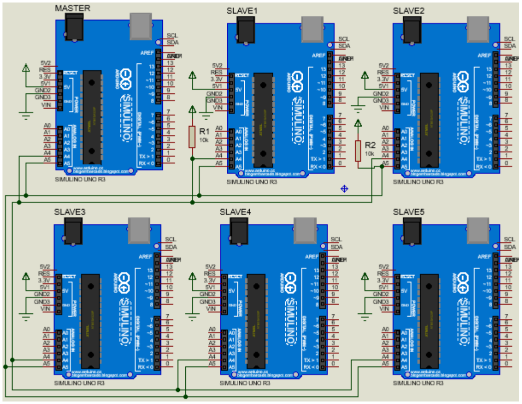

Figure 14: I2C communication connection diagram between Arduino Master and Arduino SLAVE 1,2,3,4,5

Circuit diagram of converting HOME sensor signals to connect with Arduino SLAVE, as shown in Figure 15.

The diagram of the Bluetooth HC05 connection with Arduino Master is illustrated in Figure 12.

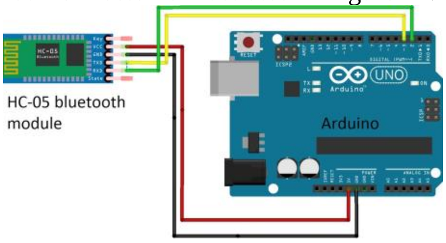

Figure 12: Bluetooth HC05 connection diagram with Arduino Master

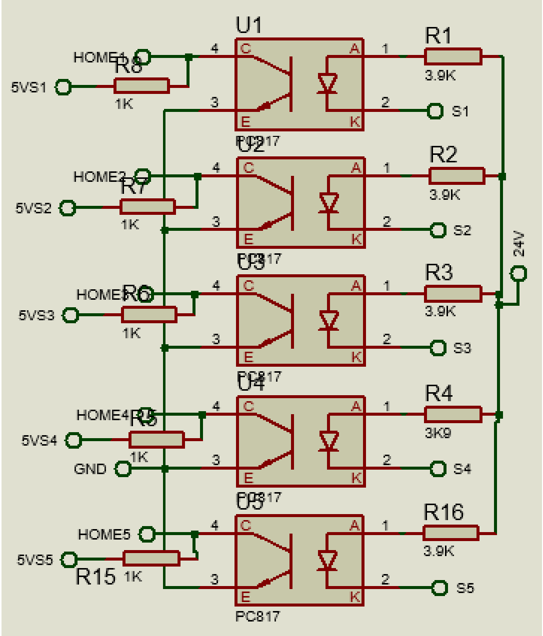

Figure 15: Circuit diagram of converting HOME sensor signals to connect with Arduino SLAVE

The signal diagram of the connection of SLAVE1 to the Drive that controls the motor and the HOME sensor has converted the voltage signal, the SLAVE 2, 3, 4 are similar to the SLAVE 1.

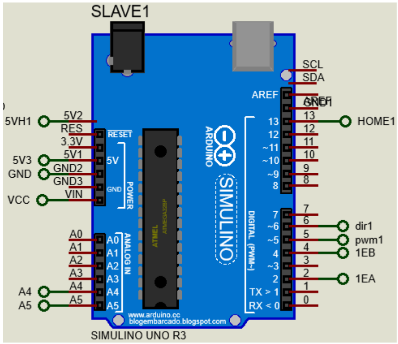

Figure 16: Signal connection diagram of SLAVE 1

C. *Robot Control Algorithm*

The implementation flowchart of the algorithm is shown in Figure 17. In this algorithm, the input is the grab position and the drop position. And the intermediate trajectory going from the beginning to the end is planned by the user. Usually, they are simple trajectories for programming, such as lines or circles. Another important issue is that the trajectory the user is planning must be within the robot's work zone.

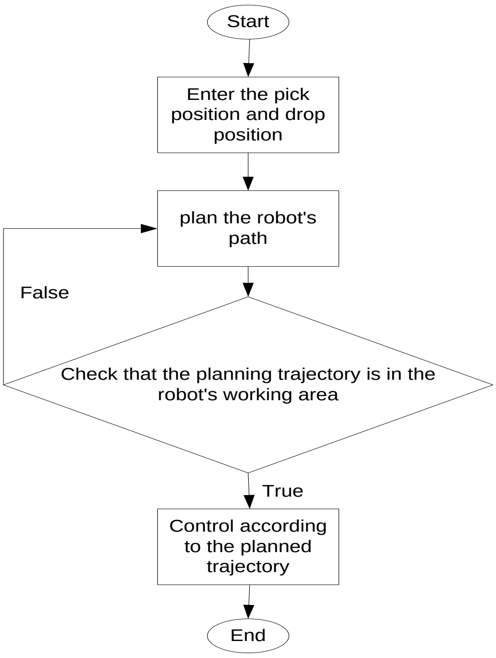

Figure 17: Algorithm for grab and drop orbital planning

D. Robot Control Interface

The console for the robot 5 degrees of freedom on the phone is implemented on the Android app design website http://ai2.appinventor.mit.edu. Figure 18 shows the installed interface on the smartphone or tablet.

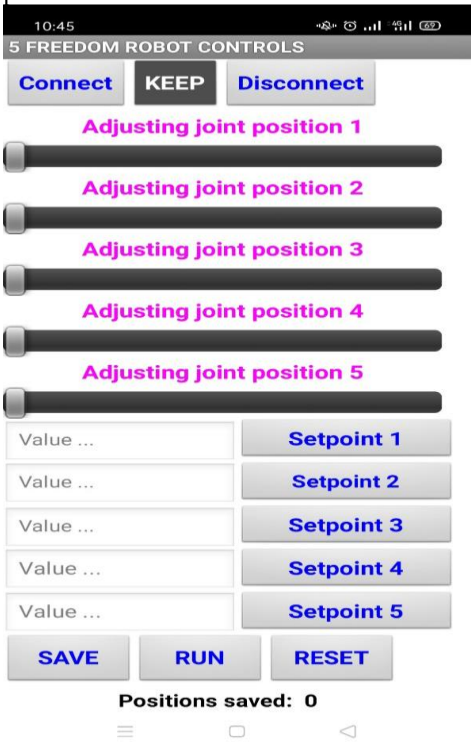

Figure 18: Interface for running the application to control the robot 5 degrees of freedom on a smartphone

IV. EXPERIMENTAL RESULTS

This section presents the experimental results that the team has done with the new robot controller. The team conducts a trajectory planning experiment for the pick and drop of the robot.

Figure 19 shows when the robot starts picking up the product. Figure 20 shows when the product is being moved. Figure 21 shows when the robot places the product in the desired position.

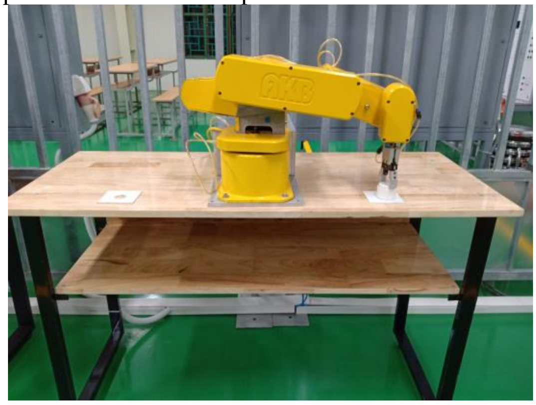

Figure 19: Robot picks up the product

a)

b)

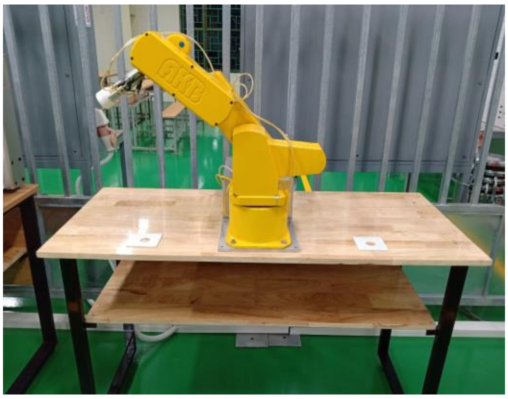

c)

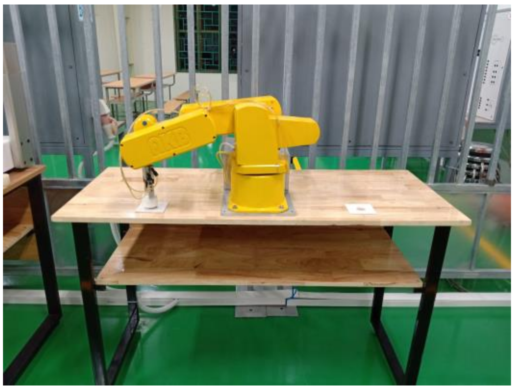

d)

Figure 20: Product is on the move a), b), c), d)

Figure 21: The product is in place

V. CONCLUSIONS

The paper presents a controller design method for an industrial robot that has only hardware. The power circuit, control circuit, and console are all newly built. Since then, the control algorithm is built to control the trajectory robot of the pick-up robot. This algorithm can be used to build experiments for students to practice. The paper's research results can completely apply to further research directions about robots, especially the integration of sensor signals to control robots. The paper results can also be applied to the manufacturing of new robots for use in learning, research, and industrial production lines.

ACKNOWLEDGMENT

This study was supported by the University of Economics - Technology for Industries, Viet Nam; http://www.uneti.edu.vn/.

REFERENCES

[1] P. Kazanzides, H. Wasti, and W. A. Wolovich. A multiprocessor system for real-time robotic control: Design and application : in Proc. IEEE Int. Conf. Robotics Automation: 1987 Boston, MA, USA. 1903–1908.

[2] Mohammed Abu Qassem, I.M. Abuhadrous, H. Elaydi, Modeling and Simulation of 5 DOF educational robot arm. In Conference: 2nd International Conference on Advanced Computer Control (ICACC): 5 April 2010.

[3] Dinh Tho Long, To Van Binh, Roan Van Hoa, Le Van Anh, Nguyen Van Toan, Robotic Arm Simulation using Matlab and Robotics Toolbox for Industry Application, SSRG International Journal of Electronics and Communication Engineering, 7(10), (2020) 1-4.

[4] A. A. Goldenberg, and L. Chan, An Approach to Realtime Control of Robots in Task Space. Application to Control of PUMA 560 Without VAL-II, IEEE Transactions on Industrial Electronics, 35(2) (1988) 231-238.

[5] H. Bruyninckx, Open Robot Control Software: the OROCOS project. in Proc: IEEE Int. Conf. on Robotics And Automation : 2001. 2523–2528.

[6] C. Cote, Y. Brosseau, D. Letourneau, C. Raievsky, and F. Michaud, Robotic Software Integration Using MARIE, International Journal of Advanced Robotic The system, 3(1) (2006) 55-60.

[7] J. Gamez, J. Gomez, L. Nieto, A. G. Sanchez. Design and Validation of an Open Architecture for an Industrial Robot Control. in IEEE International Symposium on Industrial Electronics : 2007 : 2004–2009.

[8] K. Nilsson, and R. Johansson, Integrated Architecture For Industrial Robot Programming and Control, J. Robotics and Autonomous Systems, 29(4) (1999) 205-226.

[9] S. E. Shafiei, Advanced Strategies for Robot Manipulators, Sciyo, Croatia, (2010) 281–396.